AM

Ball screw

Linear / Rotation

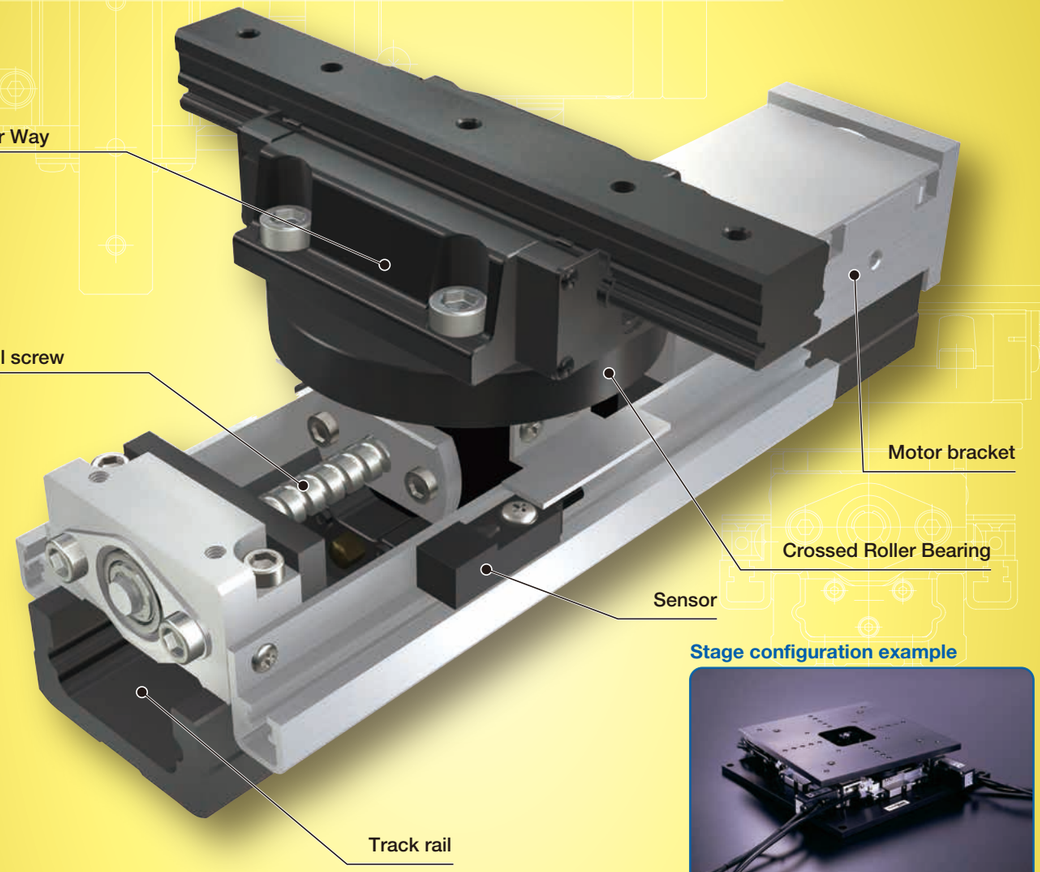

Stage configuration example

Major product specifications

Driving method	Precision ball screw
Linear motion rolling guide and bearing	Linear Way (ball type) Crossed Roller Bearing
Built-in lubrication part	No built-in
Material of table and bed	High carbon steel
Sensor	Provided as standard

Accuracy

unit: mm

Positioning repeatability	±0.002
Positioning accuracy	0.020
Lost motion	–
Parallelism in table motion A	–
Parallelism in table motion B	0.008
Attitude accuracy	–
Straightness	–
Backlash	0.003

Points

● Positioning module enabling various motions

1 This is a positioning module developed for alignment stage by combining the high rigidity Crossed Roller Bearing and Linear Way based on the Precision Positioning Table TU.

● Height adjustment is not required.

2 Tolerance of height dimension is managed at high precision of ±10μm. Alignment stage can be configured without adjusting the heights of respective Alignment Module AM.

● Flexibility of freely designing the stage according to the usage

3 This unit helps you freely design the alignment stage according to the usage by combining various stages and bases into the Alignment Module AM.

● Large stage of □2,000 class is also supported!

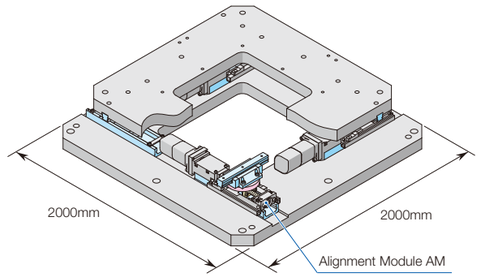

Configuration example and operating principle of alignment stage

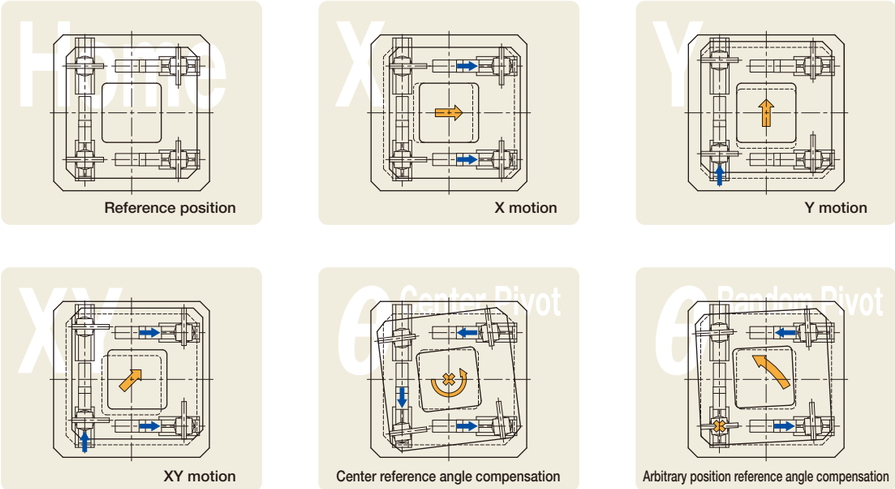

Variation

Shape	Model and size	Size W×L×H (mm)	Stroke length (mm)
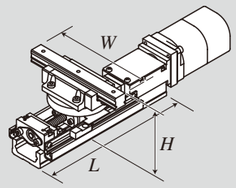	AM25	86×130× 47	30
	AM40	120×180× 78	30
	AM60	220×290×110	90
	AM86	350×390×148	120

1N=0.102kgf=0.2248lbs.
1mm=0.03937inch

Identification Number

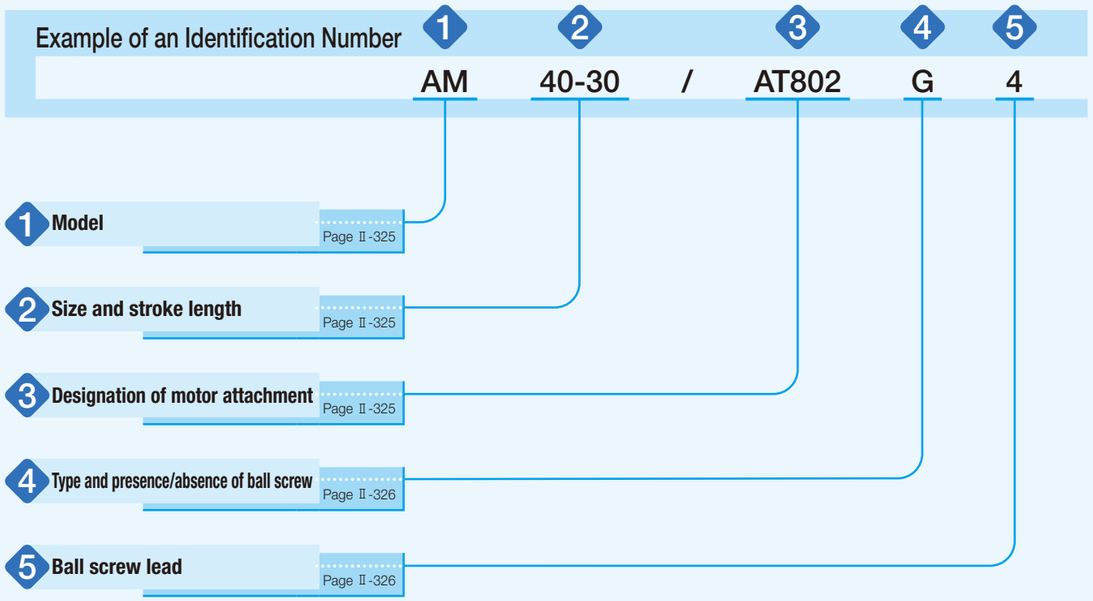

Identification Number and Specification

1 Model

AM: Alignment Module AM

2 Size and stroke length

25- 30: Width 25mm, stroke length 30mm, height 47mm
40- 30: Width 40mm, stroke length 30mm, height 78mm
60- 90: Width 60mm, stroke length 90mm, height 110mm
86-120: Width 86mm, stroke length 120mm, height 148mm

3 Designation of motor attachment

AT800: Without motor attachment
To specify the motor attachment, select it from the list of Table 1.

- Motor should be prepared by customer.
- Please specify motor attachment applicable to motor for use.
- If motor attachment is specified, a coupling shown in Table 2 is mounted on the main body before shipment. However, the final position adjustment should be made by customer since it is only temporarily fixed.
- For a product without motor attachment (AT800), no coupling is attached.

Table 1 Application of motor attachment

Motor to be used					Flange size mm	Motor attachment			
Type	Manufacturer	Series	Model	Rated output W		AM25	AM40	AM60	AM86
AC servo motor	YASKAWA ELECTRIC CORPORATION	Σ-V	SGMMV-A2A	20	□25	AT801	–	–	–
			SGMMV-A3A	30		AT801	–	–	–
			SGMJV-A5A	50	□40	–	AT802	–	–
			SGMAV-A5A			–	AT802	–	–
			SGMJV-01A	100		–	AT802	AT803	–
			SGMAV-01A			–	AT802	AT803	–
			SGMAV-C2A	150		–	–	AT803	–
			SGMJV-02A	200	□60	–	–	–	AT804
			SGMAV-02A			–	–	–	AT804
			SGMJV-04A	400		–	–	–	AT805
			SGMAV-04A			–	–	–	AT805
	Mitsubishi Electric Corporation	J3, J4	HG-AK0236	20	□25	AT801	–	–	–
			HG-AK0336	30		AT801	–	–	–
			HF-MP053, HG-MR053	50	□40	–	AT802	–	–
			HF-KP053, HG-KR053			–	AT802	–	–
			HF-MP13, HG-MR13	100		–	AT802	AT803	–
			HF-KP13, HG-KR13			–	AT802	AT803	–
			HF-MP23, HG-MR23	200	□60	–	–	–	AT804
			HF-KP23, HG-KR23			–	–	–	AT804
			HF-MP43, HG-MR43	400		–	–	–	AT805
			HF-KP43, HG-KR43			–	–	–	AT805
	Panasonic Corporation	MINAS A5	MSMD5A	50	□38	–	AT807	–	–
			MSME5A			–	AT807	–	–
			MSMD01	100		–	AT807	AT808	–
			MSME01			–	AT807	AT808	–
			MSMD02	200	□60	–	–	–	AT809
			MSME02			–	–	–	AT809
			MSMD04	400		–	–	–	AT810
			MSME04			–	–	–	AT810
	Hitachi Industrial Equipment Systems Co., Ltd	AD	ADMA-R5L	50	□40	–	AT802	–	–
			ADMA-01L	100		–	AT802	AT803	–
			ADMA-02L	200	□60	–	–	–	AT804
			ADMA-04L	400		–	–	–	AT805

Remark: For detailed motor specifications, please see respective motor manufacturer's catalog.

Table 2 Coupling models

Motor attachment	Coupling models	Manufacturer	Coupling inertia J_c $\times 10^{-5}$kg・m^2
AT801	UA-15C- 5× 5	Sakai Manufacturing Co., Ltd	0.024
AT802	UA-20C- 5× 8	Sakai Manufacturing Co., Ltd	0.086
AT803	UA-25C- 8× 8	Sakai Manufacturing Co., Ltd	0.290
AT804	UA-30C-10×14	Sakai Manufacturing Co., Ltd	0.603
AT805	UA-35C-10×14	Sakai Manufacturing Co., Ltd	1.34
AT807	UA-20C- 5× 8	Sakai Manufacturing Co., Ltd	0.086
AT808	UA-25C- 8× 8	Sakai Manufacturing Co., Ltd	0.290
AT809	UA-30C-10×11	Sakai Manufacturing Co., Ltd	0.603
AT810	UA-35C-10×14	Sakai Manufacturing Co., Ltd	1.34

Remark: For detailed coupling specification, please see the manufacturer's catalog.

4 Type and presence/absence of ball screw

G: Ground ball screw
N: Without ball screw

When selecting N, specify AT800 for 2 and set "No symbol" for 5.

5 Ball screw lead

4: Lead 4mm (applicable to AM25 and AM40)
5: Lead 5mm (applicable to AM60 and AM86)

1N=0.102kgf=0.2248lbs.
1mm=0.03937inch

Specifications

Table 3 Accuracy unit: mm

Model and size	Stroke length (1)	Length of track rail	Positioning repeatability (1)	Positioning accuracy (1)	Parallelism in motion B	Backlash (1)
AM25	30	130	±0.002	0.020	0.008	0.003
AM40	30	180				
AM60	90	290				
AM86	120	390				

Note (1) Not applicable to "Without ball screw" specification.

Table 4 Height unit: mm

Model and size	Module height	Tolerance of height
AM25	47	±0.010
AM40	78	
AM60	110	
AM86	148	

Remark: These are values of distance between mounting surface and the center of module upper surface under the condition where upper and lower axis intersect orthogonally and the linear motion rolling guide of each axis stays at the center of the stroke.

Table 5 Maximum speed

Model and size	Ball screw lead mm	Maximum speed mm/s
AM25	4	200
AM40		
AM60	5	250
AM86		

Remark: To measure the practical maximum speed, it is required to consider operation patterns based on the motor to be used and load conditions.

Table 6 Specifications of ball screw unit: mm

Model and size	Shaft dia.	Overall length
AM25- 30	6	146
AM40- 30	8	158
AM60- 90	12	263
AM86-120	20	359

Table 7 Maximum carrying mass unit: kg

Model and size	Maximum carrying mass	
	Horizontal	Vertical
AM25	11	4.6
AM40	39	10
AM60	88	13
AM86	210	23

Table 8 Table inertia and starting torque

Model and size	Table inertia J_T $\times 10^{-5}$kg·m^2	Starting torque T_S N·m
AM25	0.028	0.02
AM40	0.08	0.04
AM60	0.59	0.09
AM86	4.97	0.13

Mounting

For the processing accuracy of the Precision Positioning Table mounting surface and the tightening torque of the fixing screws, see page Ⅲ-29.

Sensor Specification

Table 9 Sensor timing chart

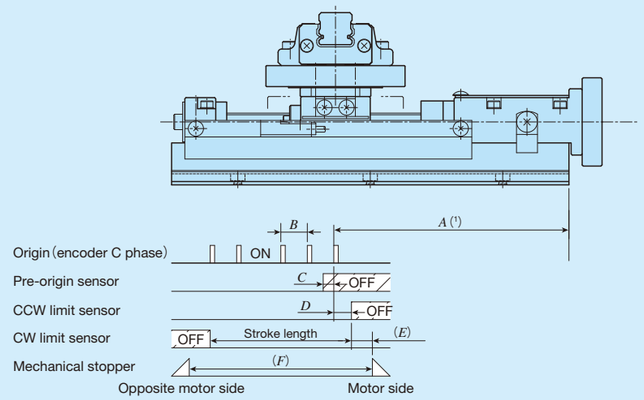

unit: mm

Model and size	A	B	C	D	E	F
AM25	90	4	2	15	8	46.4
AM40	90	4	2	15	8	48.5
AM60	133	5	3	45	16	117.6
AM86	155	5	3	60	8	135

Note (1) The origin is the center of stroke.

Example of Motion Specification

Combining the AM enables the following table configurations.
And, as it is possible to attach this unit to the device to be delivered, if you are interested, please contact IKO.

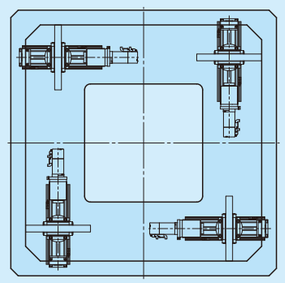

Reference position

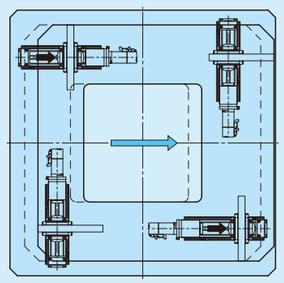

X motion

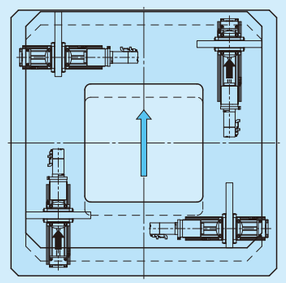

Y motion

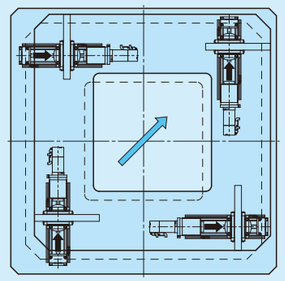

XY motion

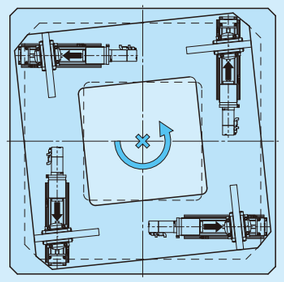

Center reference angle compensation

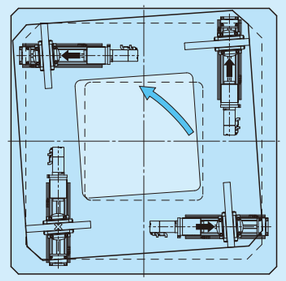

Arbitrary position reference angle compensation

1N=0.102kgf=0.2248lbs.
1mm=0.03937inch

Dimensions of Motor Attachment

AM25

AT800
(without attachment)

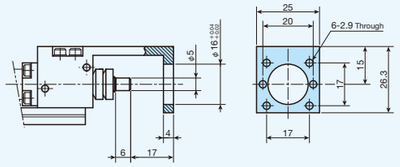

AT801

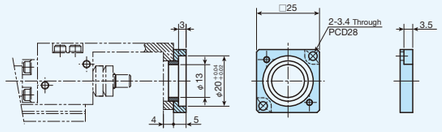

AM40

AT800
(without attachment)

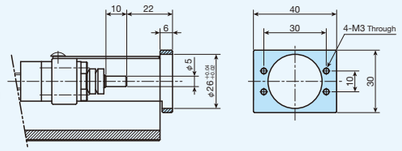

AT802

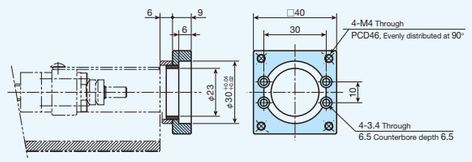

AT807

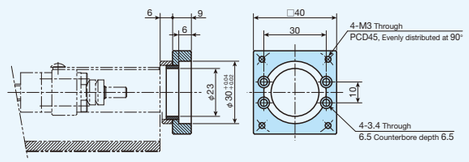

AM60

AT800
(without attachment)

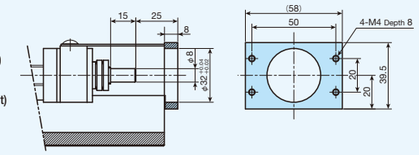

AT803

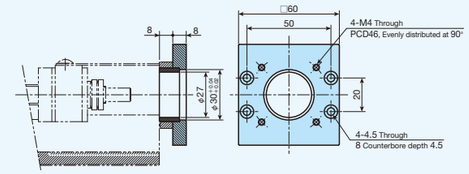

AT808

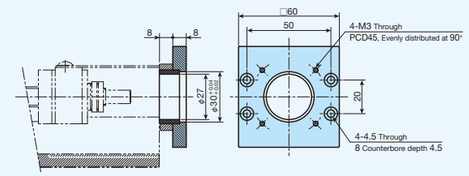

AM86

AT800
(without attachment)

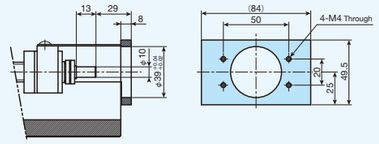

AT804

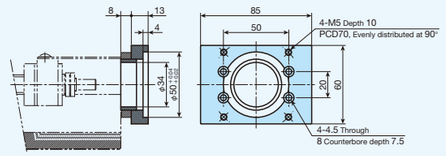

AT805

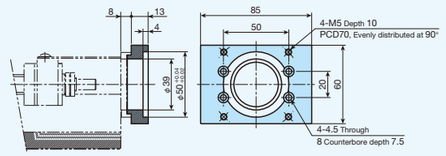

AT809

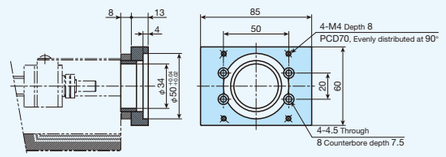

AT810

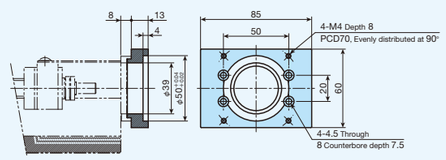

AM

1N=0.102kgf=0.2248lbs.
1mm=0.03937inch

AM25 Without motor attachment and with ball screw

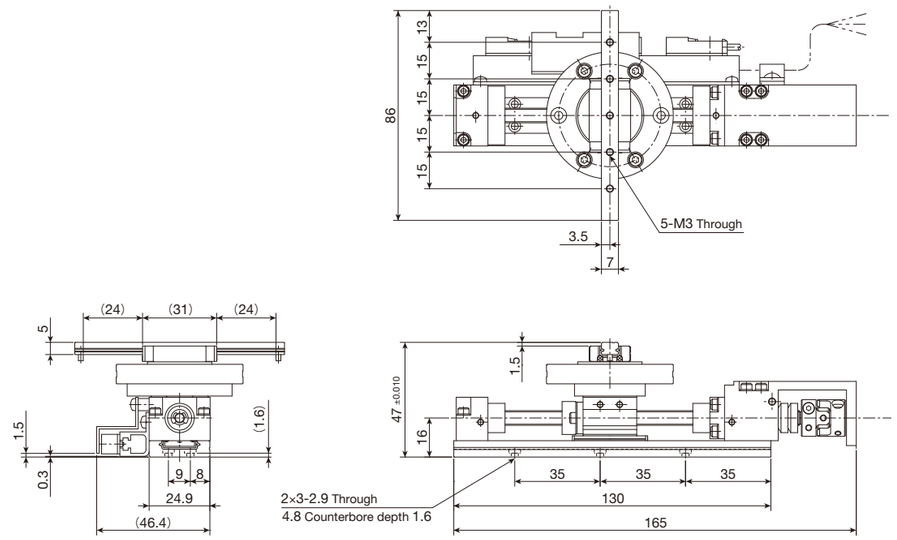

mass: 0.6kg

AM25 Without ball screw

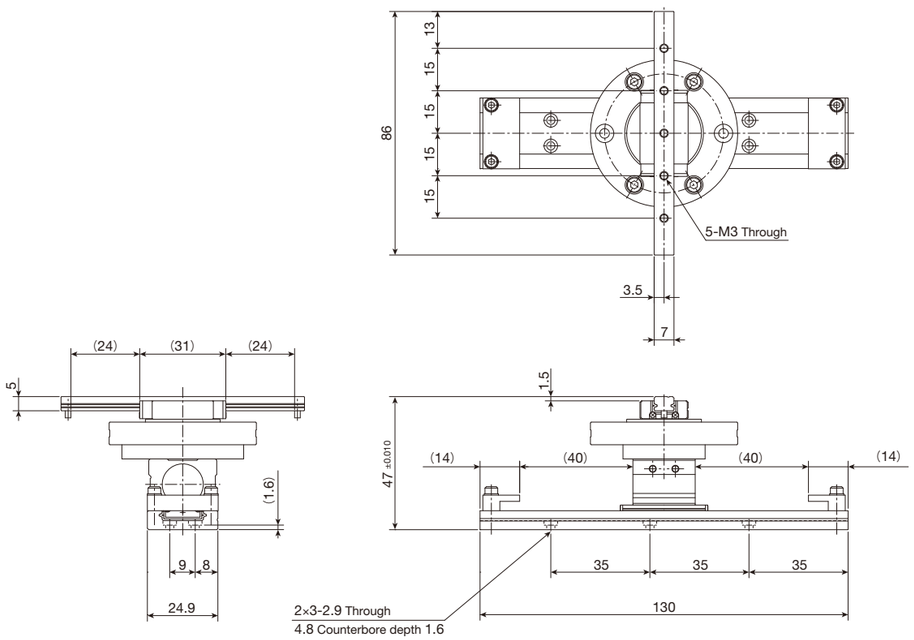

mass: 0.4kg

AM40 Without motor attachment and with ball screw

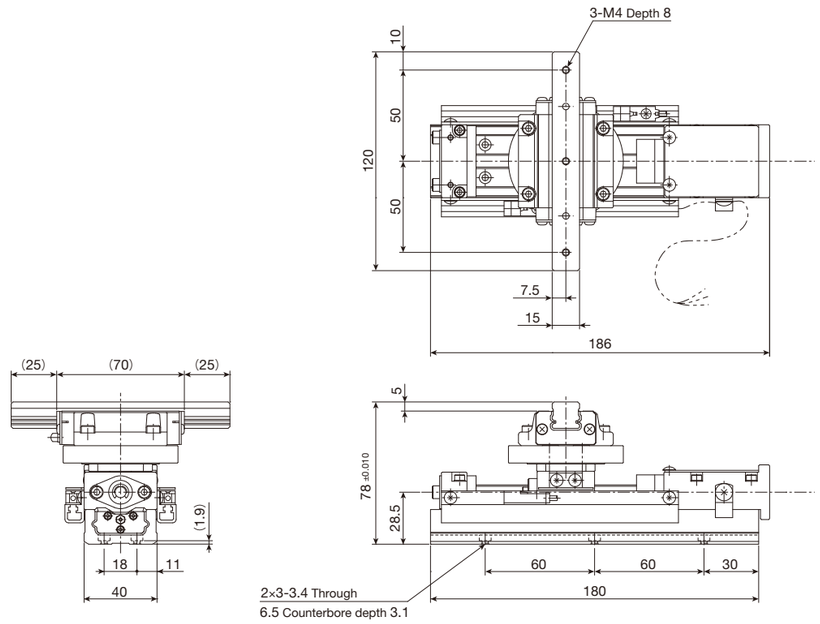

mass: 2.0kg

AM40 Without ball screw

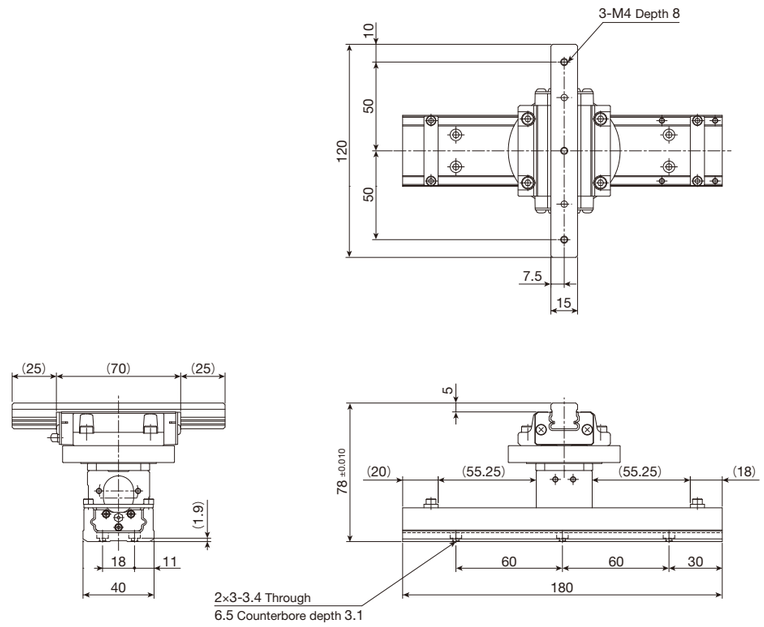

mass: 1.5kg

1N=0.102kgf=0.2248lbs.
1mm=0.03937inch

AM60 Without motor attachment and with ball screw

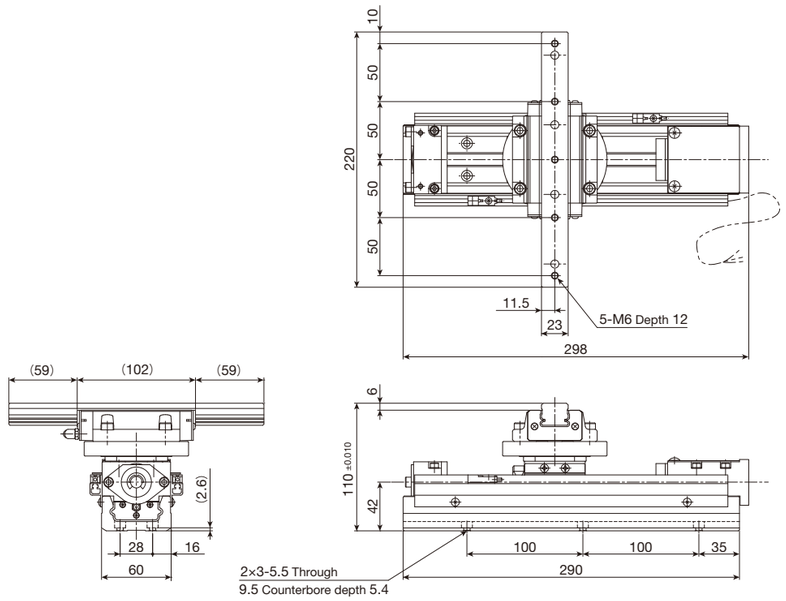

mass: 6kg

AM60 Without ball screw

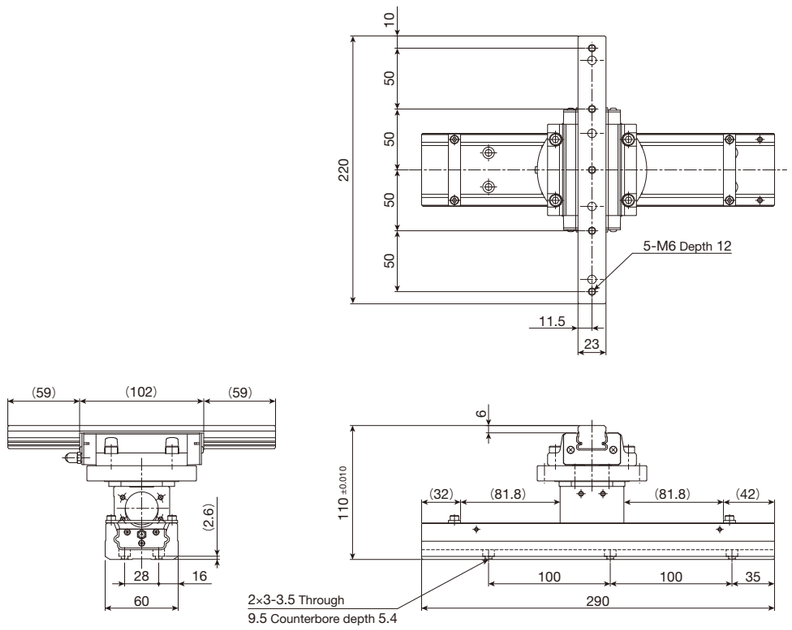

mass: 5kg

AM86 Without motor attachment and with ball screw

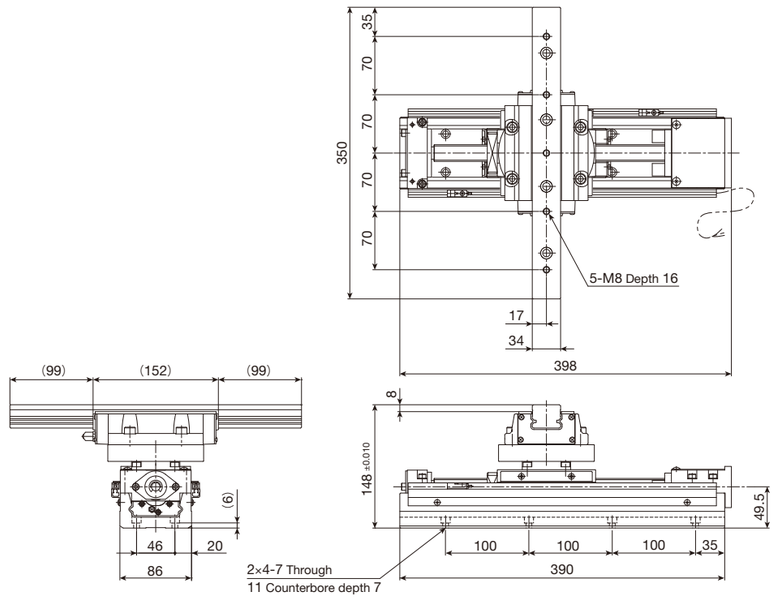

mass: 17kg

AM86 Without ball screw

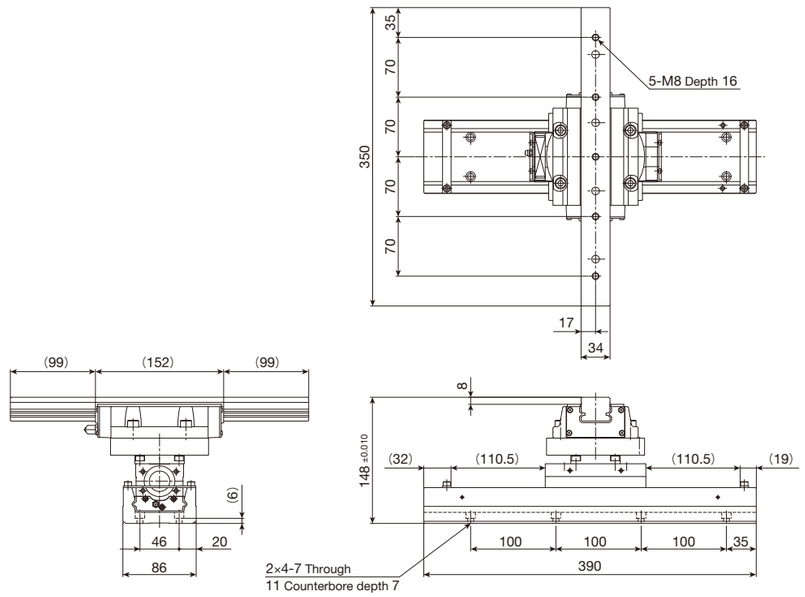

mass: 15kg

AM

1N=0.102kgf=0.2248lbs.
1mm=0.03937inch